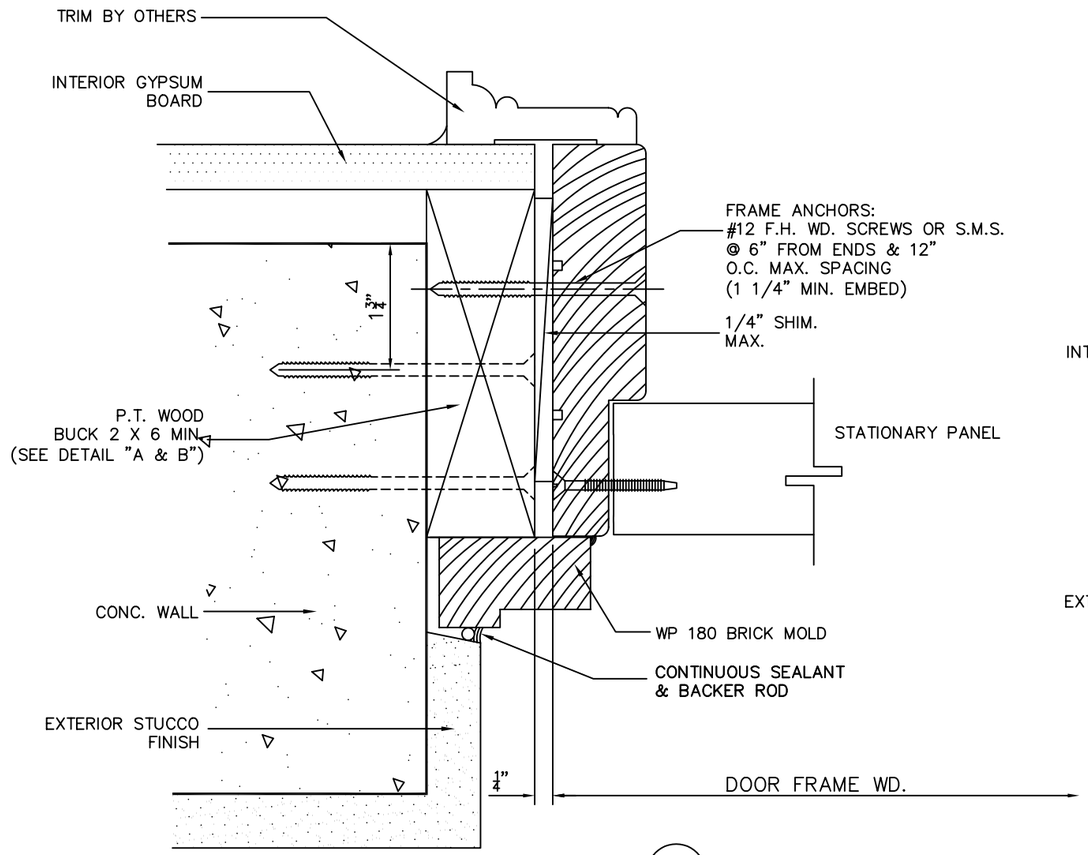

4 JAMB

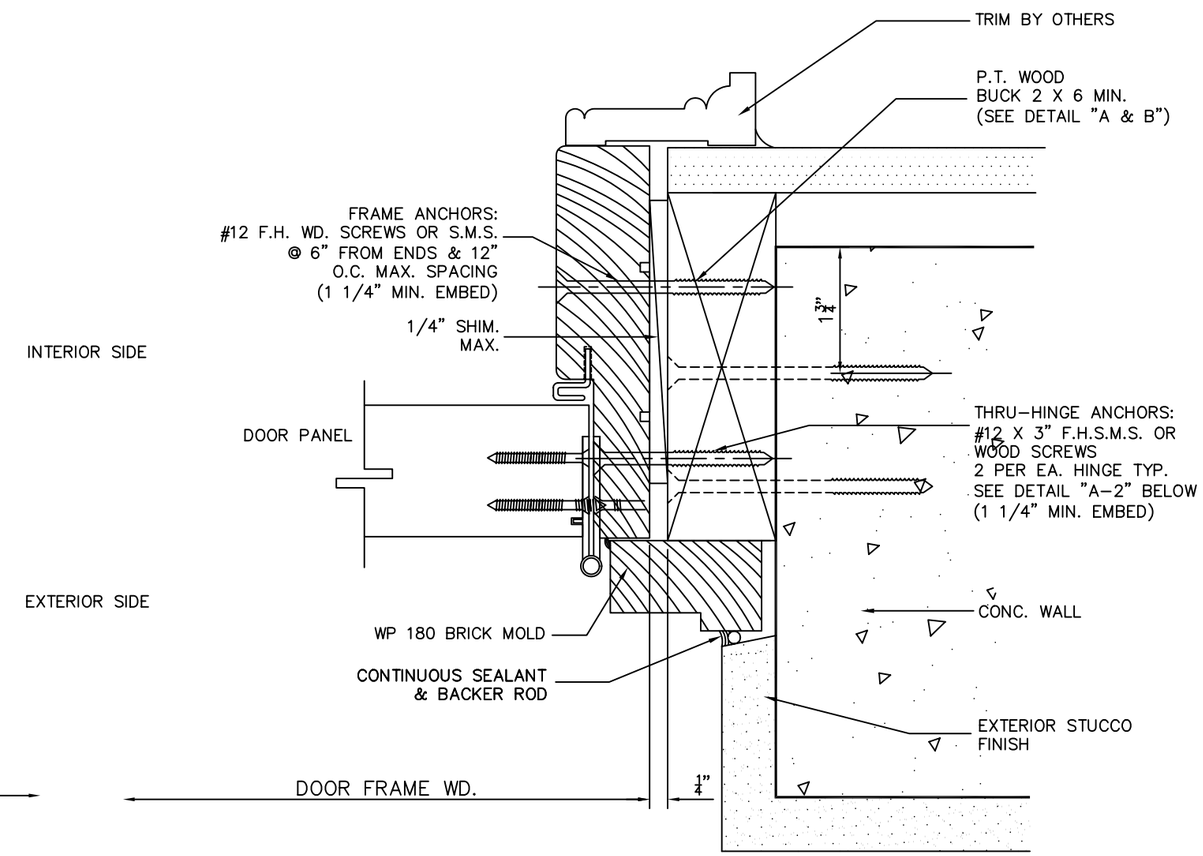

5 JAMB

INTERIOR SIDE

EXTERIOR SIDE

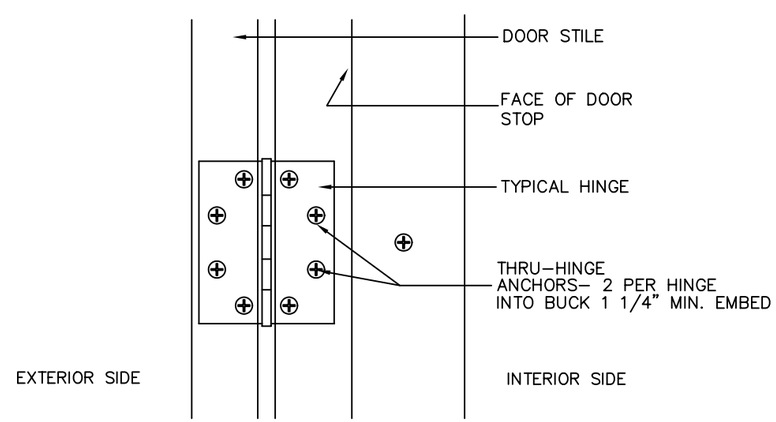

DETAIL "A-2".
(TYPICAL AT ALL HINGES)

NO.	REVISION DESCRIPTION	BY	DATE

DRAWING TITLE
WOOD ENTRY DOORS

PROJECT:
TYPICAL INSTALLATION DETAILS

LAG DESIGN
INDUSTRIAL MILLWORK CORP
WEST H/WAY 36 SENECA, KS 66538
(800)462-3667

CERTIFICATION

DATE:
02/28/05

DRAWING NO:
CATALOG DET

SHEET NO:
2 OF 4