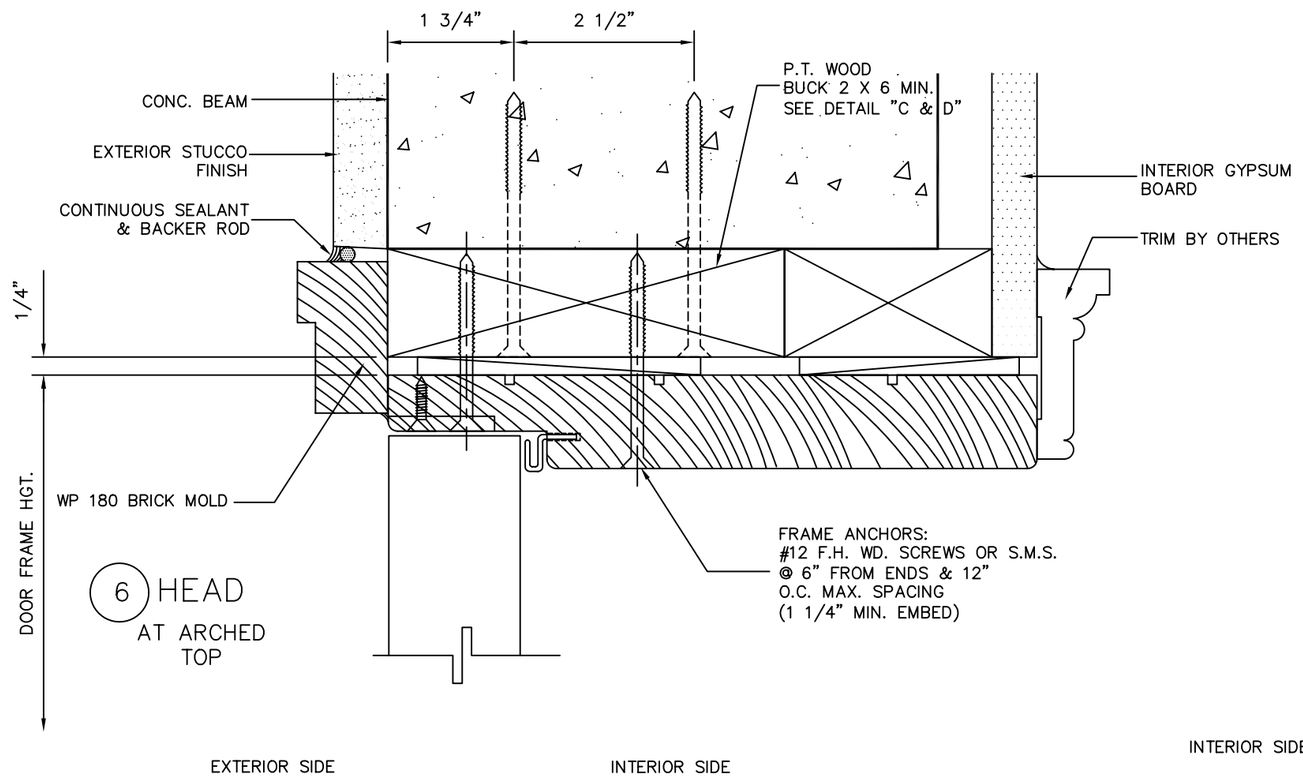

6 HEAD
AT ARCHED TOP

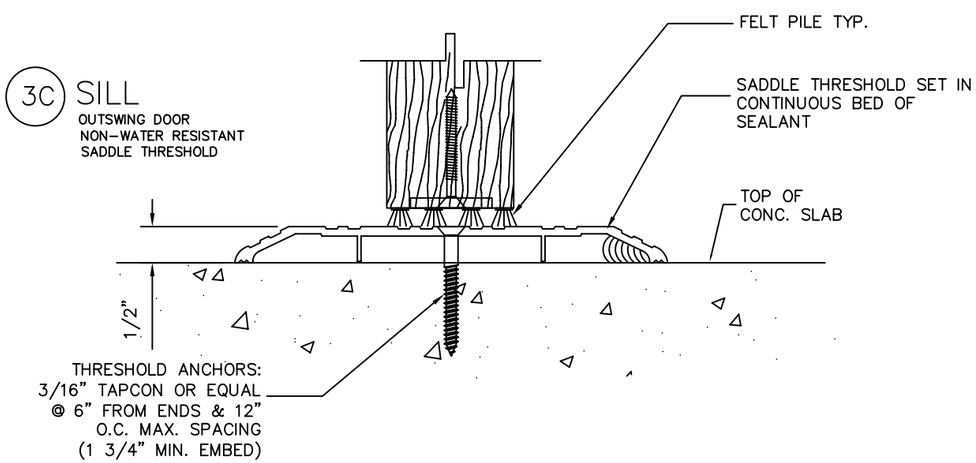

3C SILL
OUTSWING DOOR
NON-WATER RESISTANT
SADDLE THRESHOLD

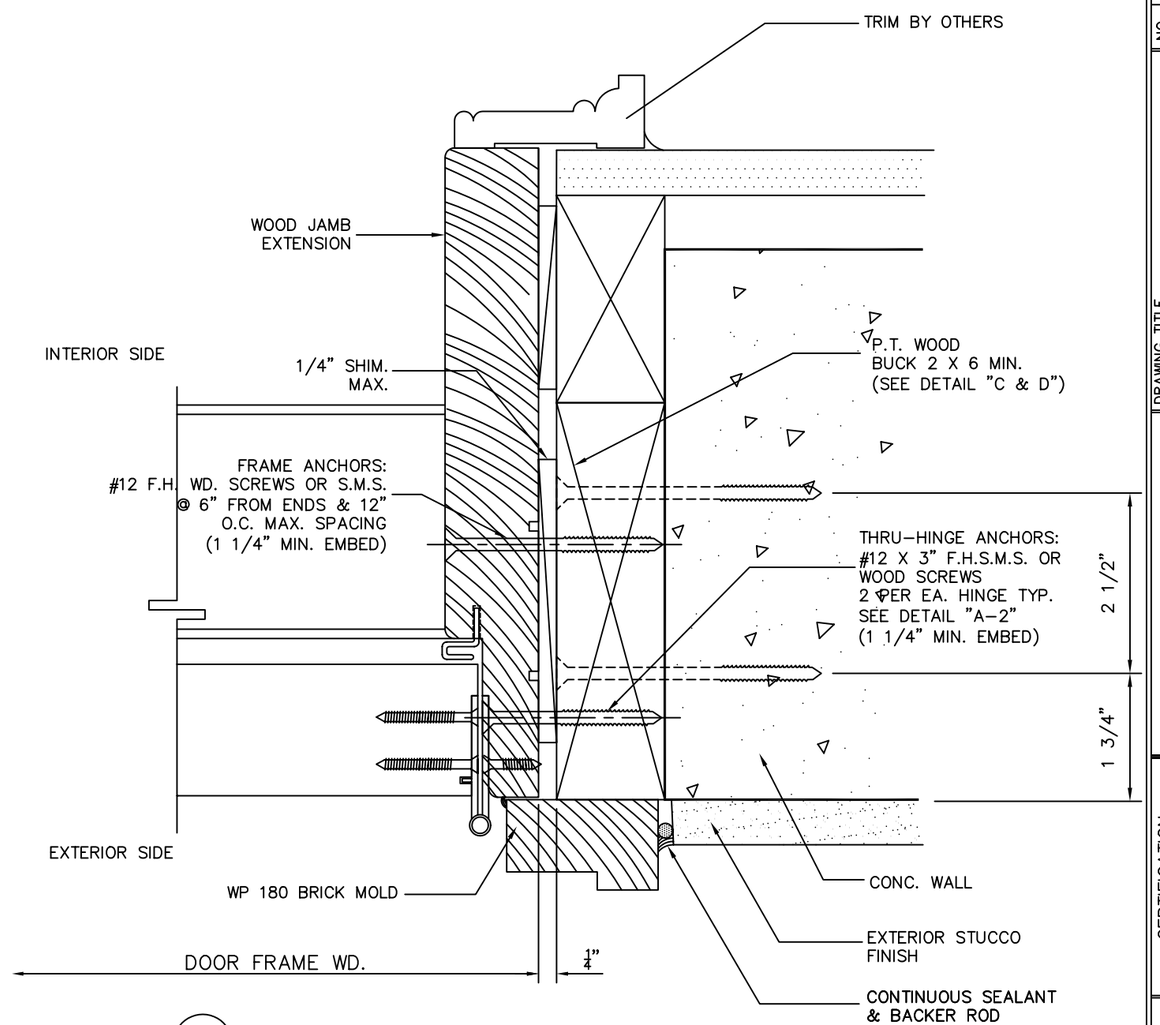

7 JAMB
AT ARCHED TOP

NO.	REVISION DESCRIPTION	BY	DATE

DRAWING TITLE: WOOD ENTRY DOORS
PROJECT: TYPICAL INSTALLATION DETAILS

LAG DESIGN
INDUSTRIAL MILLWORK CORP
WEST H/WAY 36 SENECA, KS 66538
(800)462-3667

CERTIFICATION

DATE: 02/28/05
DRAWING NO: CATALOG DET
SHEET NO: 3 OF 4